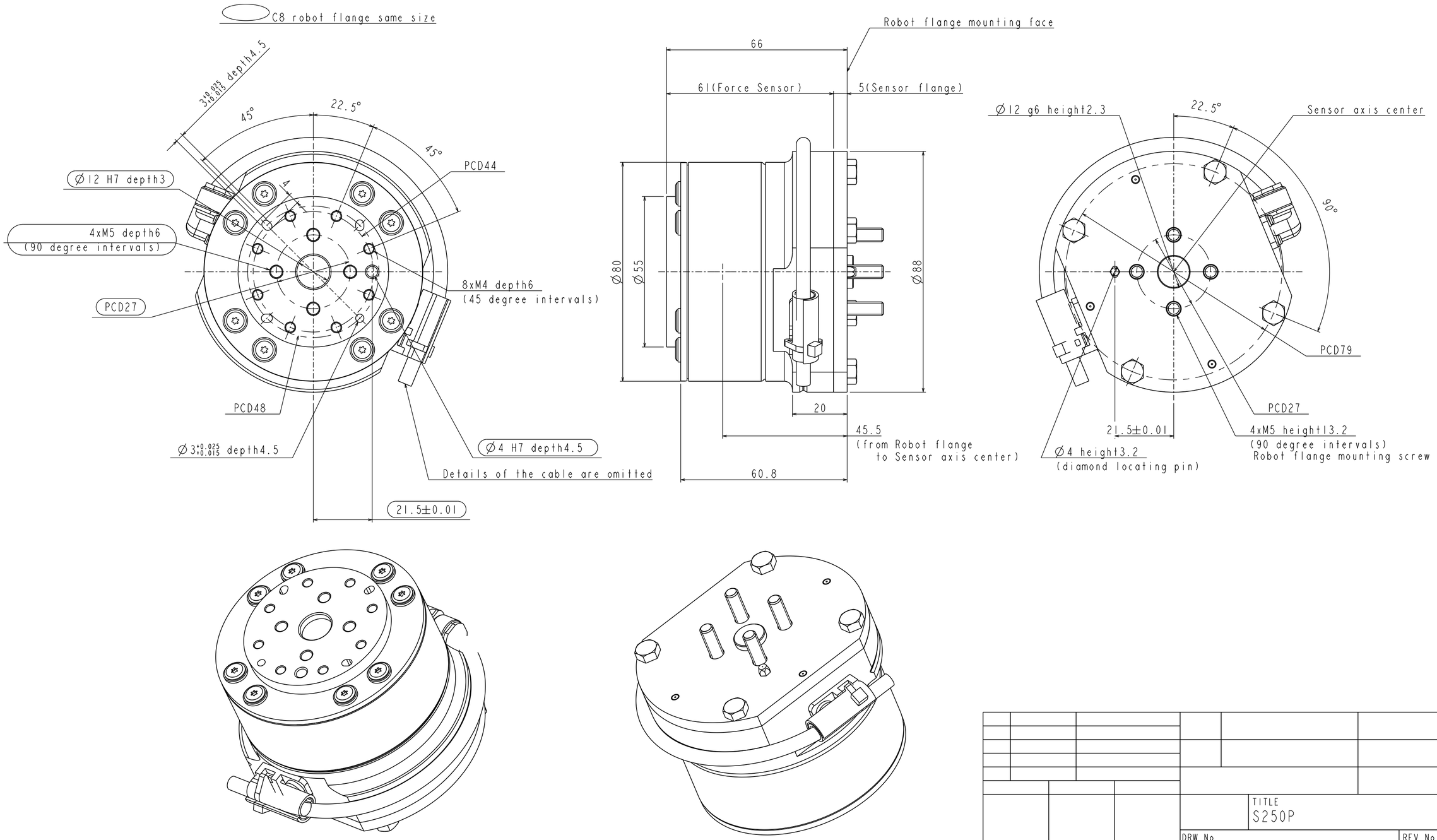

TITLE	S250P
DRW.No.	S250P_EXTERNAL_DIMENSIONS
REV_No.	01

SEIKO EPSON CORP.